MOVATOR

# model 2BB2

| | | |
|---|---|---|
| TOTAL CAPACITY | 5,850 in³ | 119 L |
| BASKET CAPACITY - UPPER | 2,142 in³ | 35 L |
| BASKET CAPACITY - LOWER | 2,142 in³ | 35 L |
| BASKET CAPACITY - REAR | 550 in³ | 9 L |
| LOWER TRAY CAPACITY | | |
| LOWER TRAY CAPACITY - REAR | 1,016 in³ | 16 L |
| NESTING DISTANCE | 11.22" | 285 mm |
| WEIGHT | 48.4 lbs | 22 kg |
| STANDARD FEATURES | E-Coat + Powder Coat<br>1" round handle<br>Bumpers<br>5" Polyurethane wheels<br>Movator 5th Wheel | |

| | | |
|---|---|---|
| AVAILABLE FEATURES | Custom Colours<br>Custom Finishes<br>Cart Locks<br>Anti-Static Wheel<br>Ergonomic Handle | Cup/Floral Holder<br>Bag Hook<br>Scanner Holder<br>Cart Containment Components (Factory Installed) |

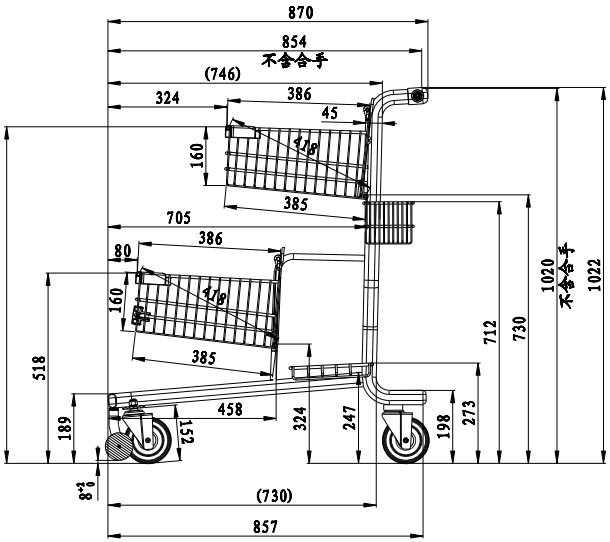


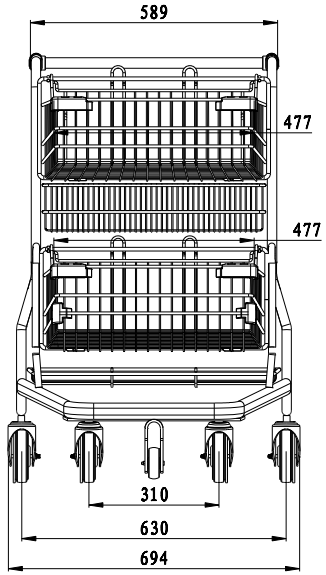


instore products limited

5181 Everest Drive Mississauga, Ontario L4W 2R2
1.888.473.3629 | www.instorecorp.com

*Dimensions (mm)